RC Procedure 2015_008

Aug 29

2015

When "Water leakage Phenomena Occurs" from Tank seal base and seal plate and Teflon sheets need replacement it is necessary to adjust and install the Teflon sheets properly. This procedure applicable for Alpha 0A ~ 0iC model machines.

[Tank seal base assembly Teflon sheet replacement procedure]

Why seal assembly Teflon sheet get damaged which causes water leakage

- **It is important to understand the usage & condition of the machine before attempt to replace the Teflon sheets in RC.**
    - **Customer is using FANUC Filters? If yes, please check the frequency of replacement.**
    - **Customer is running the machine with leakage from long time? If so, Please check the Ball screw and LM guide condition.**
    - **Check the Pre seal bellows condition?**
    - **Check the seal plate clean water flow?**

- **After above check points please take necessary action. Later follow below procedure of seal base replacement.**

Procedure

1. Before starts replacement activity ensure that the difference of mutual thickness between the new Teflon sheets (PTFE) sheets do not exceed **0. 1mm** (if it exceed 0.1mm, because of water leakage risk, don't use them).
2. Disassemble the seal parts (Bearing, seal plate, and so on) and show the PTFE sheets (and clean up the seal plate).

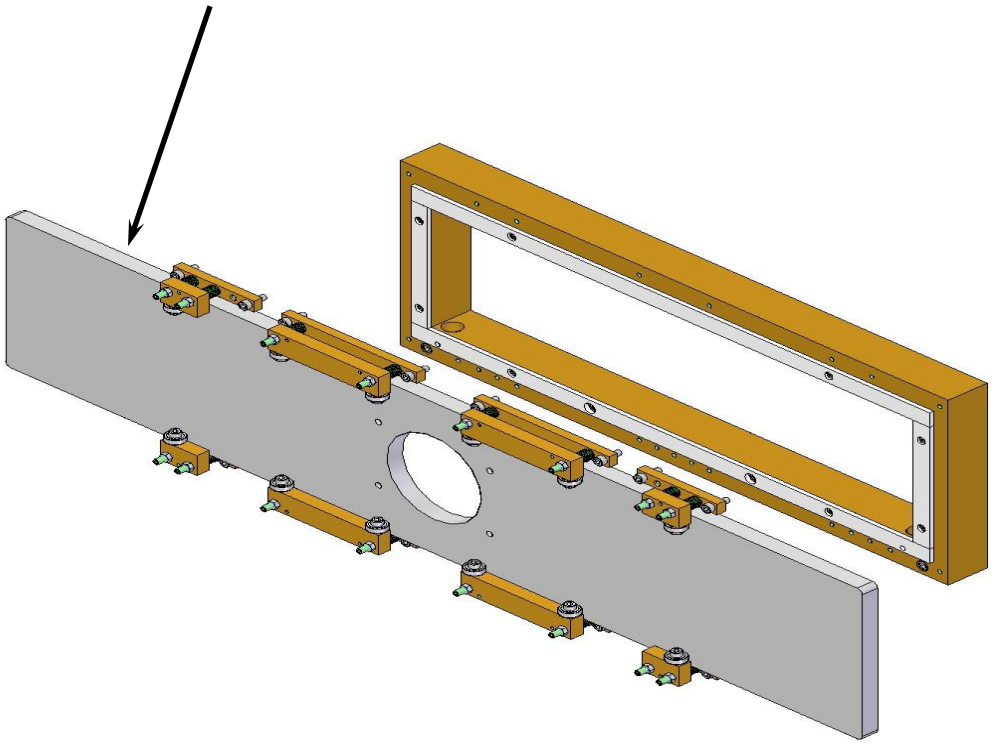

3. Take out the M3 screws which hold the Teflon (PTFE) sheet on seal base (some models does not have screws) and remove (scrape off) the Teflon (PTFE) sheets.

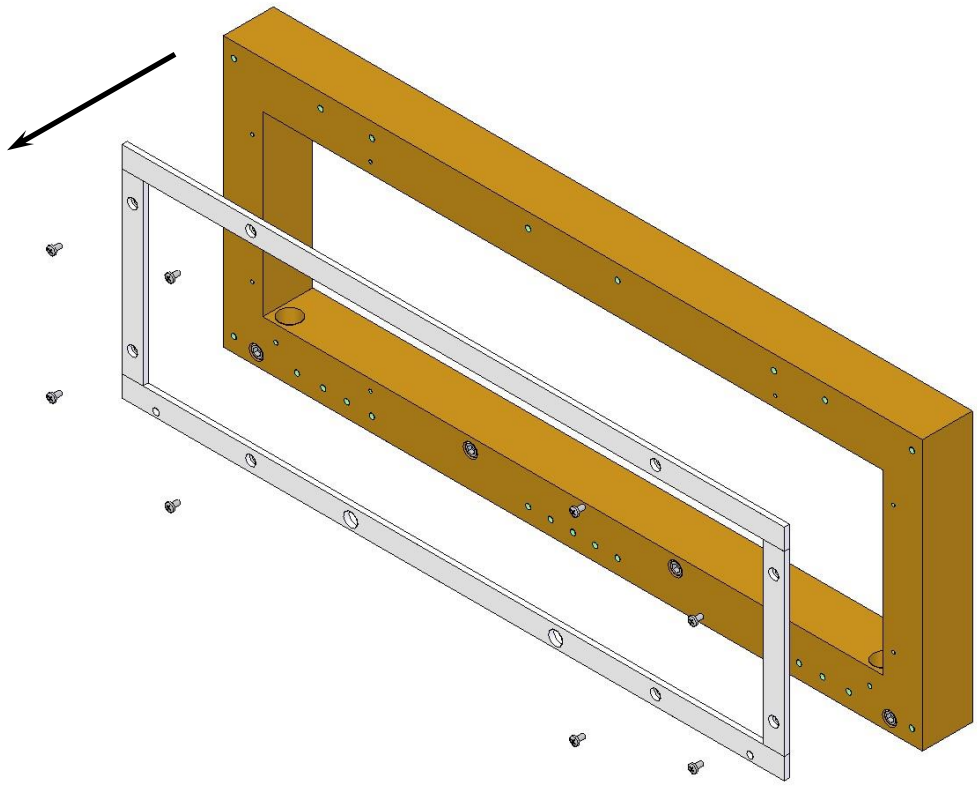

4. Remove the old glue from seal base by using scraper and emery paper throughly.

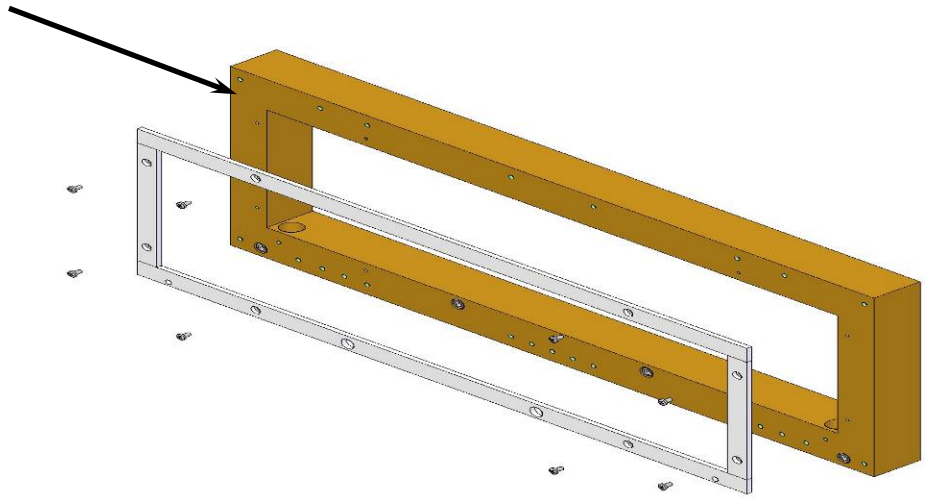

5. Degrease the Teflon (PTFE) sheet and seal base with degreasing agent. "Caution: Please don't use cleaning acid".

6. Apply a light coating of epoxy adhesive (see Note1) to cementable-treated surface of the PTFE sheet(brown color side).

7. Stick the Teflon (PTFE) sheets on seal base and tighten the M3 screws. (Tightening torque: 0.3N・m).

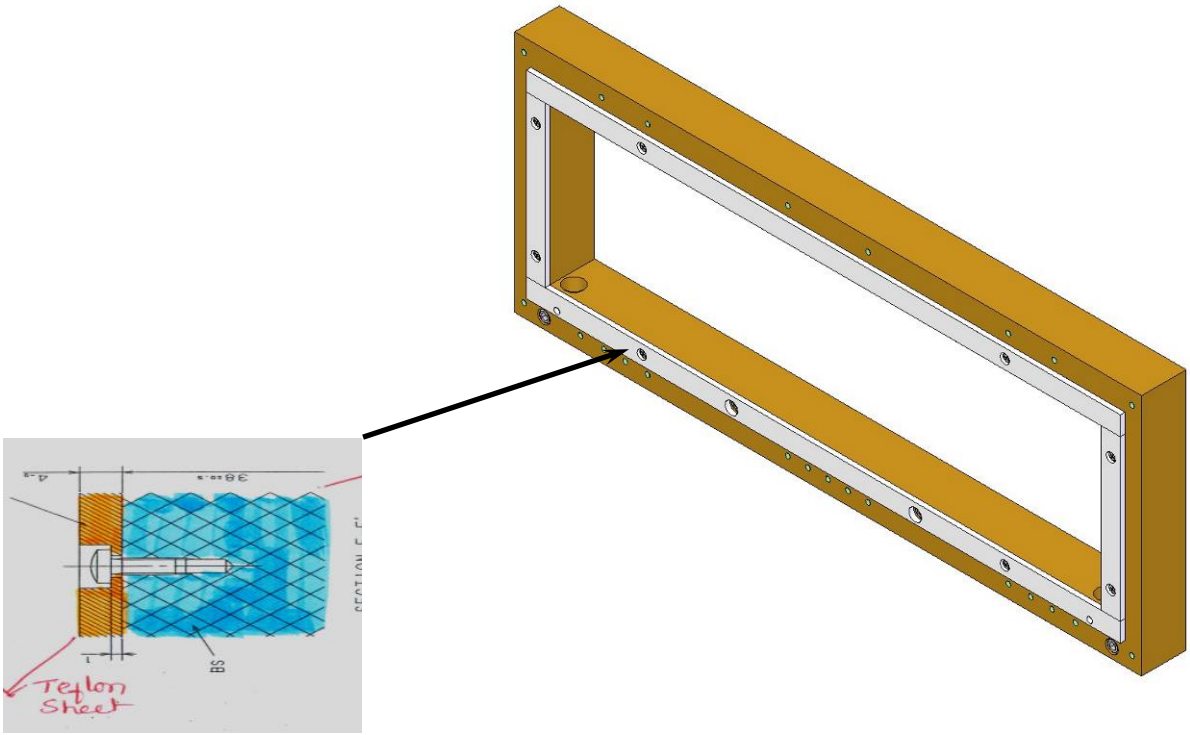

8. Temporally installed the seal plate and bearings to keep the PTFE sheets under pressure until the glue dries (Please take care glue not in contact with the seal plate from adhesion of squeezed glue).

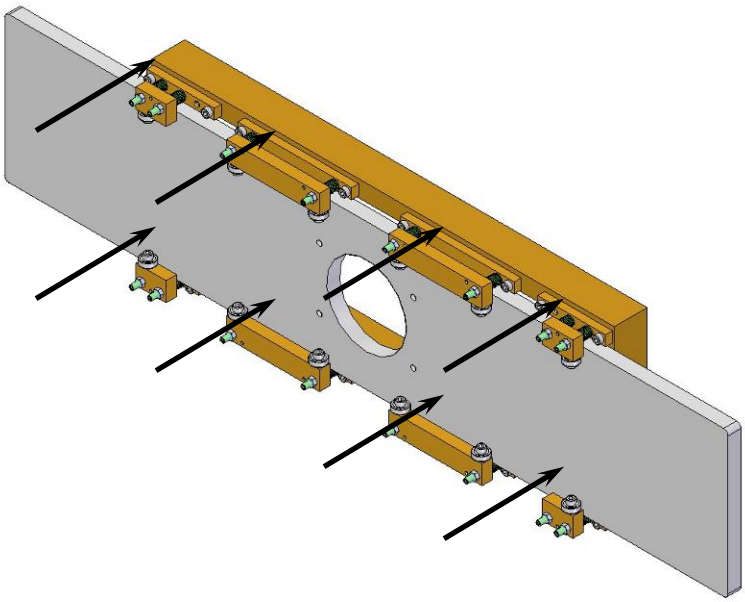

9. Cure the epoxy adhesive at least 24 hours.

10. Disassemble the seal parts.
11. Remove squeezed glue on Teflon sheets
.
12. Make sure that there are no steps on the joint part of PTFE sheets.

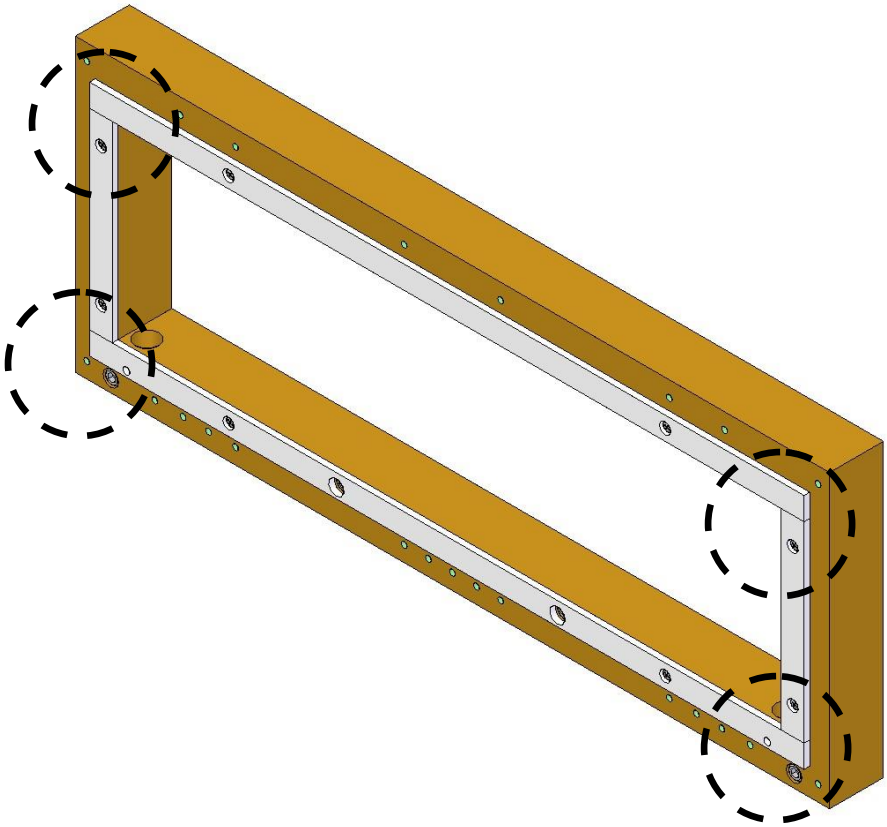

13. If there are steps, polish off smoothly with emery papers (start with grid #400 paper and finish with grid #1000).
14. Reassemble the seal parts.
15. Check the bearing and seal plate gap by feeler gauge it should be 50 micron.

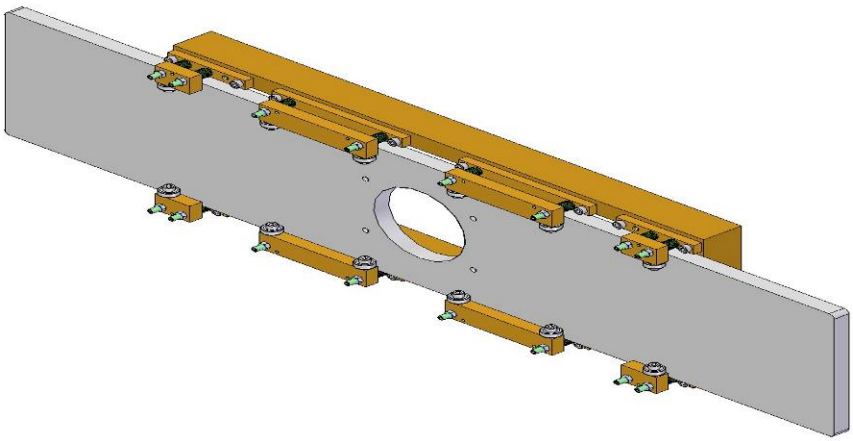

"Please check and adjust the gap as following step 1 to 4"

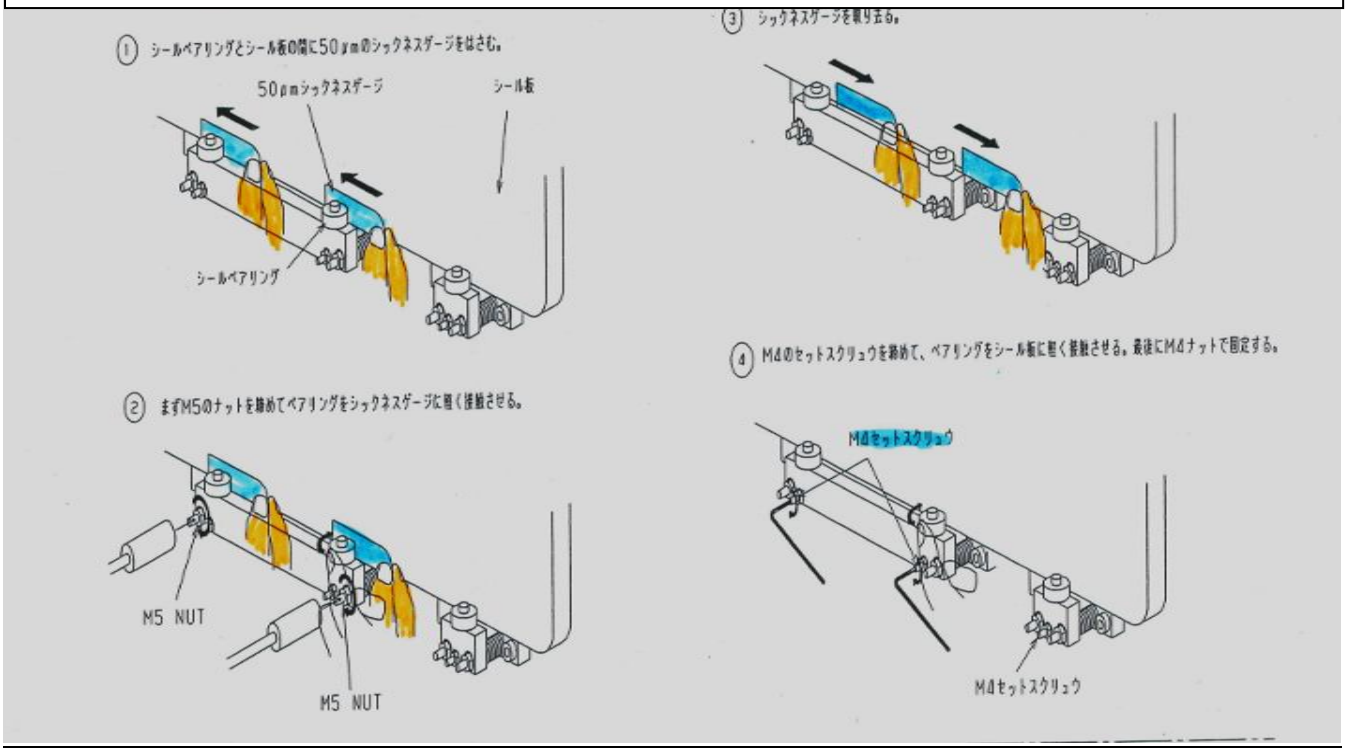

16. After ensuring above setting move the X axis an check for any abnormal load or sound.

17. Fill water to the Tank and check water leakage.

Note 1) Adhesive (two part epoxy adhesive) mentioned below.
Maker: Huntsman Advanced Materials
Product No. : ARALDITE Standard